UNCLASSIFIED [redacted]

UNCLASSIFIED OFFICE, CHIEF OF ARMY FIELD FORCES
Fort Monroe, Virginia

ATTNG-26 350.05/21(DOCI)(16 Nov 53) 16 November 1953

SUBJECT: Dissemination of Combat Information

TO: See distribution

1. In accordance with SR 525-85-5, Processing of Combat Information, the inclosed EXTRACTS are forwarded for evaluation and necessary action. It may be appropriate, in certain cases, to take action upon a single extracted item; in others, it may be desirable to develop a cross-section of accumulated extracts on a particular subject before initiating action; and, often the extracted item serves to reaffirm our doctrines and techniques.

2. Copies are furnished to other military agencies to keep them informed concerning theater problems from the front line through the logistical command.

3. These EXTRACTS are derived from reports which are classified SECRET. For the greater convenience of the user, this Office assigns each extracted item the lowest classification compatible with security. No effort is made to paraphrase or delete any portion of the extracted remarks, so that none of the original intent is lost.

4. Combat information EXTRACTS which are applicable to training at the company/battery level appear in Army Field Forces TRAINING BULLETINS.

FOR THE CHIEF OF ARMY FIELD FORCES:

DECLASSIFIED BY AUTHORITY OF TAGO 76C924 ON 1976 BY [illegible]

1 Incl
Extracts, Items
No 95 thru 135

A. B. CHATHAM
Lt Col, AGC
Asst Adjutant General

CN 83144

DISTRIBUTION:
(Over)

UNCLASSIFIED
[redacted]

Army-OCAFF-4381

DISTRIBUTION:

3	ACOFS, G-1, DA		
3	ACOFS, G-2, DA	10	The Surgeon General
15	ACOFS, G-3, DA	4	Chief of Transportation
20	ACOFS, G-4, DA		OCAFF
1	The Adjutant General	1	G1
2	Chief of Chaplains	1	G2
10	Chief Chemical Officer	20	G3
10	Chief of Engineers	2	G4
2	Chief of Finance	5	DT
2	Chief of Information	1	Ch
2	The Inspector General	1	Cml
2	The Judge Advocate General	1	Compt
2	Chief of Military History	1	Engr
2	Chief, National Guard Bureau	1	Info
10	Chief of Ordnance	1	Med
2	The Provost Marshal General	1	Ord
10	The Quartermaster General	1	PM
2	Executive for Reserve and	1	QM
	ROTC Affairs	1	Sig
10	Chief Signal Officer	1	Trans

COPIES FURNISHED:

134 TAG (40 CG, US Army Forces, Far East (Main); 44 CINC, US Army, Europe; 10 ea CG's, other major oversea commands)

CG's

2 First Army
4 Second Army
4 Third Army
12 Fourth Army
2 Fifth Army
2 Sixth Army
4 Army AA Command
2 Military District of Washington
2 Tactical Air Command
1 Mountain & Cold Weather Tng Command
1 Chairman, Joint Chiefs of Staff
1 Chief of Staff, Dept of the Army
2 Chief of Naval Operations, Dept of the Navy
2 Comdt, US Marine Corps
2 Chief, Army Advisory Gp, Air Command and Staff School, Air University

(See next page)

ATTNG-26 350.05/21(DOCI)(16 Nov 53) 16 November 1953
Subject: Dissemination of Combat Information

COPIES FURNISHED: (Cont)

1	AFF LNO, Army Cml Cen
2	Comdt of Cadets, US Military Academy
	Comdt
1	Armed Forces Staff College
2	Marine Corps School
2	USAF Air-Ground Operations School
2	Counter Intelligence Corps School
2	The Provost Marshal General's School
2	Army War College
2	CGSC
2	Army General School
2	The Armored School
2	The Artillery School
2	The Infantry School
2	Army Aviation School
2	Asst Comdt, The Artillery School
	AA&GM Branch
2	Chief, Army Security Agency
1	Officer in Charge, Atlantic Fleet Intelligence Cen,
	Attn: Ground Forces Officer
1	Director, Weapons Systems Evaluation Group, Secy of Defense,
	Attn: Col Train
	Pres
1	Bd No 1, OCAFF
1	Bd No 2, OCAFF
1	Bd No 3, OCAFF
1	Bd No 4, OCAFF
1	CO, Arctic Test Branch, OCAFF
	Chiefs
1	HRU No 1, OCAFF
1	HRU No 2, OCAFF
1	HRU No 3, OCAFF
1	Dir of Special Weapons Developments, OCAFF
1	Dir, Air University Library

	OCAFF		OCAFF
1	DCOFS	5	G3(26)
2	Combat Developments	1	AG Records
4	Combat Arms Advisory Gp	11	Extra copies
2	British Liaison Officer		
2	Canadian Liaison Officer		

(RESTRICTED) ITEM NO 95

REPLACING TANKS WITH BULLDOZERS IN ORDNANCE AMMUNITION COMPANIES. - Two of the greatest problems that the units of this battalion have faced are the construction and never ending maintenance of roads and the ever present dangers from fire in both the ammunition storage as well as the bivouac areas. During dry periods forest fires have continuously threatened the storage area. Action is needed to augment the companies' equipment with suitable devices for overcoming these problems.

Organic ammunition company equipment includes two tanks, medium, with bulldozer attachment (each costing approximately 1/4 million dollars). Their use is limited and ties up two pieces of vital tactical equipment. No other first aid fire fighting equipment is authorized. Recommend that:

a. The standard D-7 type bulldozer be substituted for the tank dozer. This would provide a much more rugged piece of equipment which could be put to a never ending use in the preparation and maintenance of roads and construction of preventive fire breaks, and would cost 1/20 of the tank dozer cost.

b. Two pieces of first-aid fire fighting equipment be added. Navy devices used to fight aircraft fires, such as the "Little Squirt" (a 1200-gallon pressure type chemical foam extinguisher mounted on a 1/4-ton vehicle and costing about $5,000), would provide the maneuverability and speed so necessary in fighting ammunition fires. (Command Report - 67th Ord Bn - April 53)

/OCAFF Comment: A study is being made to replace tank dozers in the ammunition companies with the armored bulldozer. Engineers are conducting tests on the armored bulldozer./

INCLOSURE

(RESTRICTED) ITEM NO 96

INNOVATION FOR MAINTENANCE PARTS TRAILER. - Sketch below shows a technical innovation for a maintenance parts trailer, adopted for use under Korean field conditions.

A shell, either of plywood or canvas, is constructed on a trailer, 1-ton. Shelves and cabinets for stowage of ordnance spare parts are constructed of scrap lumber. Dual wheels give necessary support and balance even in adverse terrain in order that the trailer may be taken directly to vehicles in need of repair. (Command Report - 72d Tank Bn - May 53)

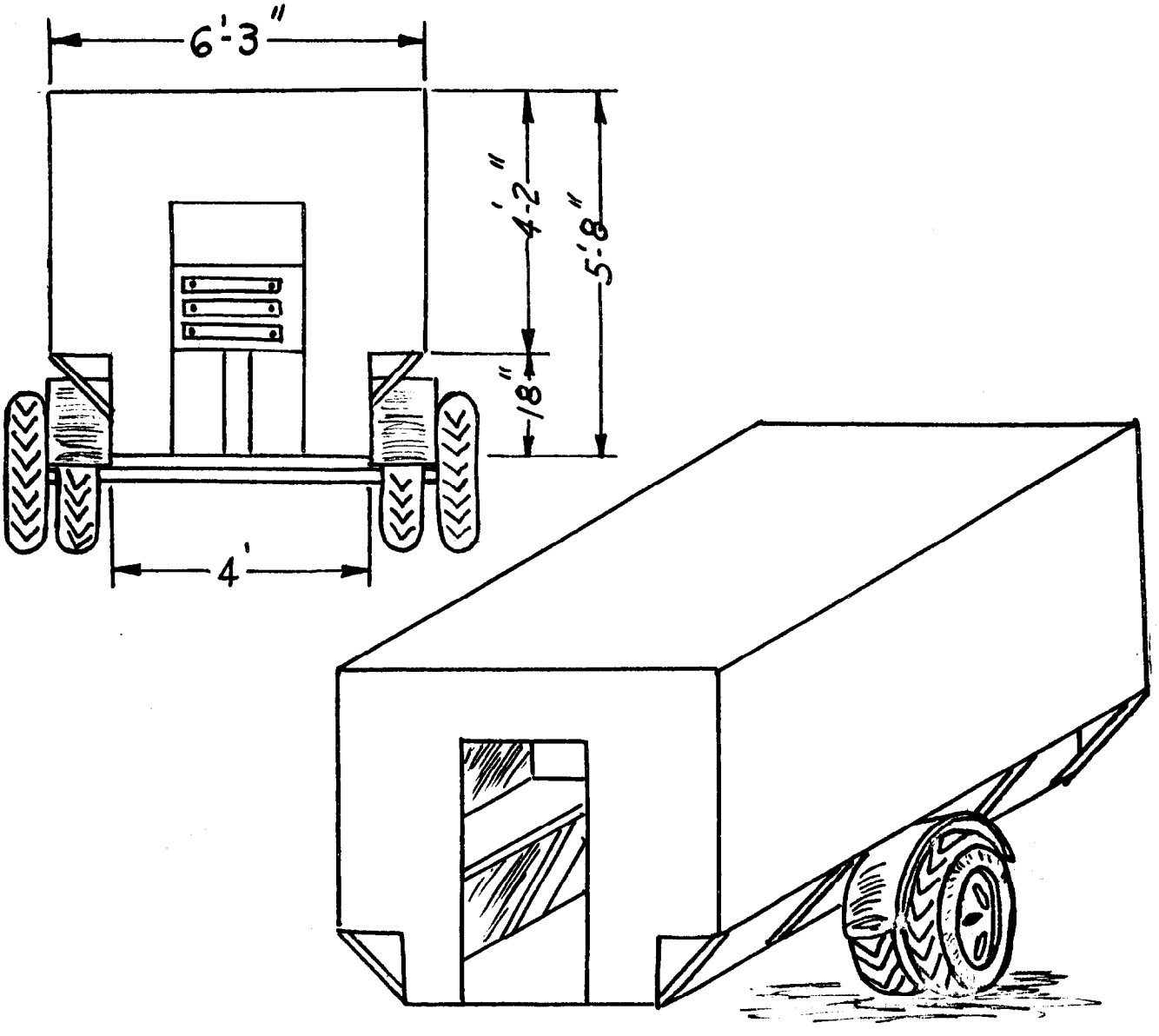

(RESTRICTED) ITEM NO 97

EXCESSIVE USE OF WP SMOKE GRENADES. - Excessive use of WP smoke grenades obscured the battlefield; WP was relatively ineffective in destruction of cave positions. Large concussion grenades and bunker bombs would have been more effective for securing prisoners and destroying all types of positions.

Assault elements having the mission "to capture and destroy" should be provided with large concussion grenades to stun the enemy and bunker bombs to blow up bunkers and positions. (Command Report - 15th Inf Regt - May 53)

/OCAFF Comment: The fragmentation grenade is the primary, casualty producing grenade. The primary purpose of the WP grenade is to screen and to burn. The WP grenade is approximately 50% heavier than the fragmentation grenade which reduces throwing range. Substitution of the WP grenade for the fragmentation grenade is not recommended. Satchel charges can be used to stun the enemy and blow up bunkers./

(RESTRICTED) ITEM NO 98

FAILURE TO INCLUDE ON-CARRIAGE AND ON-VEHICULAR EQUIPMENT. - Twelve 240-mm howitzers have been received and processed for issue. Eight pieces are awaiting the fabrication of loading trays and sight mount brackets. The failure to include On-Carriage Equipment and On-Vehicular Equipment with the major item continues to cause delays. (Command Report - 4th Ord Bn - Apr 53)

(RESTRICTED) ITEM NO 99

REQUIREMENT FOR HEAVY-DUTY GASOLINE GENERATOR IN FIELD ARTILLERY BATTALION. - This battalion lacks proper facilities for charging storage batteries used to power the radio set AN/VRQ 2 located in the battalion fire direction center and battery executive posts. Firing batteries have no facilities for charging these batteries other than the truck upon which the set is mounted. The battalion FDC has available five power units PE 210 to be used for this purpose and for vehicular charging. These radios have to operate for days at a time, which results in excessive vehicle engine wear and fuel consumption, and immobilizes the vehicle. The power unit PE 210, when operated over long periods of time at speeds great enough to generate 24 VDC, has a high incidence of piston rod and bearing failure.

Recommend that the headquarters battery and firing batteries be authorized a gasoline generator capable of delivering 26 - 28 VDC at 40 - 50 amperes, similar to the tank heater generator ("Little Joe"). Another method suggested is the rectifier, RA 83-A to be used with the electric lighting equipment, 3 KVA, Set No 3 issued to headquarters battery. (Command Report - 17th FA Bn - June 53)

/OCAFF Comment: Upon the development of a suitable power unit, a substitution for the PE 210 will be made in T/O&E's./

(RESTRICTED) ITEM NO 100

NIGHT TRAINING FOR AW IN CLOSE SUPPORT. - Most training is conducted at service schools during hours of daylight. In Korea experience has shown that most close support missions are utilized at night. Recommend that both officer and enlisted personnel be trained in CONUS in the utilization of AW fire for close support during hours of darkness. (Command Report - 3d Inf Div - Apr 53)

/OCAFF Comment: Appropriate night training is included under OCAFF Training Memorandum No 5, 11 March 1953./

(RESTRICTED) ITEM NO 101

CONTAINER FOR PRIMERS ON 155-MM HOWITZERS. - During prolonged periods of firing cannoneers are inclined to remove the belt primer M-8 which holds 20 primers and the spare firing mechanism M-1 and hang it on any convenient hook or object nearby. This often causes the primers and firing mechanism to become excessively dirty and subject to damage. To provide a more suitable storage place for primers and the two firing mechanisms issued with each 155-mm howitzer, recommend a fitted container be designed and attached to the inner side of the right trail near the trail hinge in such a manner that it could be used during firing to hold the firing mechanisms in readiness for use and the primers easily available to the cannoneers. The compartment should be designed to contain 50 primers to preclude having to store part of the contents of an opened metal container elsewhere. It should also be dust-tight for traveling in much the same manner as is the panoramic telescope case mounted on the left shield. Such a modification would eliminate the need for a primer belt, relieve the cannoneer of this dangling appurtenance in front of his person, increase the effectiveness of operation, and keep both primers and mechanisms out of the dirt and in a prescribed location. (Command Report - 31st FA Bn - June 53)

(RESTRICTED) ITEM NO 102

FIELD ARTILLERY BATTERY INNOVATIONS. - The problem of each howitzer section identifying its aiming posts from all other aiming posts was simplified by the following procedure. A three-color code for the battery was established. The first and fourth sections have red and white striped aiming posts issued. The second and fifth sections have painted their posts yellow and white and the third and sixth sections use blue and white stripes.

A field expedient that has been in operation for many months is the use of one common battery for all aiming post night lights and for a diffused light over the ammunition pits. A length of issue field wire, WD-1, connecting aiming post night light devices and the ammunition pit light is connected to a battery, BA-70, with the switch for the circuit located near the gunner. (Command Report - 49th FA Bn - June 53)

(RESTRICTED) ITEM NO 103

TESTING ARTILLERY 105-MM CANNISTER AMMUNITION. - The first two rounds were fired at a target 550 yards away, using the elbow telescope sight set at 600 yards. Most of the effect from these two rounds was short. The next two rounds were fired at a target 300 yards away, using the elbow telescope sight set at 300 yards, with the effect falling short. Two rounds were fired at a range of 300 yards, using a quadrant elevation of 64 mils set on the elevation drum scale. This corresponds with a range of 1200 yards in the elbow telescope sight. The effect observed from these two rounds was good.

It was found that when using the elbow telescope sight the range should be multiplied by 4 to give the correct range. For example, if the range to the target is 300 yards, the sight picture should read a range of 1200 yards in the elbow telescope sight.

It was observed that a 3/4-inch pine board and a 55-gallon oil drum were penetrated in several places at a range of 300 yards.

Gun pits presently occupied by this battalion are not conducive to the use of cannister ammunition. The height of the gun pit walls prohibits the howitzers from laying at the elevation which cannister ammunition must be fired to be effective. (Command Report - 143d FA Bn - April 53)

(RESTRICTED) ITEM NO 104

ALTERNATE SIGNAL FOR VT FIRES. - Experience in Korea has demonstrated that in the event of attack by a sizeable enemy force on a friendly position, communication lines are particularly vulnerable to enemy fire and are often cut by exploding shells. When a friendly outpost position has been overrun, it is probable that radio communications will also be disrupted. On numerous occasions, a decision to fire VT fuzed artillery directly on the friendly position has been advisable. In the event all communications have been lost with the position, there must be a signal readily recognizable to all friendly elements to indicate that VT is about to be fired upon the position. The following SOP within an RCT is an example:

When friendly elements on position decide to bring their own artillery fire down, and all communications have been lost, a belt of solid tracer ammunition from a .30 caliber machine gun is fired vertically from the position. The infantry battalion commander, if he concurs, will request an answering signal from the artillery consisting of six rounds white phosphorus at 5-second intervals, time fuzed to burst 100 yards in the air immediately in front of the position to be fired on. This will be followed immediately by the HE, VT on position.

In the event that no signal is received from the position and the commander decides to fire the VT on his own initiative, the same signal from the artillery will prevail.

Experience has shown that using an M500 fuze, cutting back the time two seconds and increasing the angle of site equivalent to 100 yards will give an ideal height of burst for the white phosphorus signal. This signal is distinctive and readily distinguishable from other air bursts or pyrotechnics in the air. (Command Report - 48th FA Bn - April 53)

(RESTRICTED) ITEM NO 105

TRAINING AIDS SYSTEM. - Training aids are indisputably an essential part of any good class. Field expedients are used but are limited. An Army training aids system could be established whereby units in reserve could be loaned visual training aids for a short period. This would, in effect, increase the effectiveness of each class and reduce the reliance on each instructor for superior initiative and teaching ability. (Command Report - 23d Inf Regt - May 53)

/OCAFF Comment: A training aids center system presently exists in FECOM consisting of eleven training aids subcenters, one of which is located in Seoul, Korea. This system is capable of providing training aids support./

(RESTRICTED) ITEM NO 106

NEED FOR SYSTEM OF AIRCRAFT IDENTIFICATION. - Recommend that a more efficient system be established for the identification of aircraft flying over front line corps and division sectors. The present Air Force and antiaircraft radars deployed in rear areas do not provide adequate and rapid screening of aircraft over corps and division areas; there is no agency within a corps or division to provide this screening. This problem can best be solved by making an antiaircraft artillery operations detachment available to each front line corps. This detachment should man an antiaircraft operations center which has direct communications with all Army and Air Force installations controlling aircraft flying over the corps sector. (Command Report - 3d AAA AW Bn (SP) - Apr 53)

/OCAFF Comment: OCAFF Arms Board Report recommended one AAOD per corps./

(RESTRICTED) ITEM NO 107

USE OF ELECTRICAL FENCES TO SAFEGUARD SUPPLIES. - The latest type of security fence erected was an electric fence (5-strand barbed wire) approximately six feet high. The electric fence is the innermost fence, and the two outside fences are double-apron barbed wire fences approximately five feet high.

The electric fence has a psychological effect on would-be intruders or pilferers and is considered a major factor in attaining required security. The minimum number of volts applied to the conductor (barbed wire) has been 110. (Command Report - 58th QM Salvage Company - June 53)

/OCAFF Comment: For other extract on this subject see Item No 38, inclosure to letter, ATTNG-26 350.05/11(DOCI)(C)(10 Sep 53), OCAFF, 10 September 1953, subject: "Dissemination of Combat Information."/

(RESTRICTED) ITEM NO 108

ORDNANCE BATTALION T/O&E CHANGE. - Vehicles authorized Company A by T/O&E 9-27, while adequate in quantity, are not believed to be of the right type. The largest vehicle authorized by T/O&E for the maintenance platoons is a 1/4-ton 4x4. These maintenance platoons change large tank assemblies in forward areas which results in a great saving of time. One 2-1/2-ton cargo truck is required to transport these assemblies. (Command Report - 707th Ord Bn - April 53)

(RESTRICTED) ITEM NO 109

METHODS OF CONSTRUCTION OF WIRE LINES IN FORWARD AREAS. - The established operational policy requires all wire lines to be cabled and suspended above ground on poles or other overhead support. This requirement also applies to short intrabattery lines within a position area. In general these lines tend to follow main roads and routes of approach. Such communication lines present a neat appearance, are easy to service under quiet conditions, and are less subject to damage by weather or other natural hazards. However, this method of establishing wire lines has proven unsatisfactory every time this battalion has been subjected to enemy shelling. During the first minutes of heavy enemy artillery fire on the night of 1 - 2 June every wire line to every unit coming into the battalion switchboard and fire direction center was cut. As soon as practicable, wire lines within the battalion were rerouted and laid according to procedure established and recommended by The Artillery School. They were dug in, placed in well defiladed routes, and even protected by sand bags where other methods were not possible. After these basic procedures were accomplished the battalion was subjected to several more intense shellings and numerous harassing rounds of enemy fire. Little difficulty with wire communications within the battalion was experienced. To replace and repair overhead lines knocked out by enemy fire this battalion alone expended 120 miles of wire. The interests of economy and efficiency would be better served if communication lines in areas regularly subjected to enemy fire were laid along defiladed routes and dug in or covered in all exposed places.

Recommend that basic established procedures as to cover and defilade, be followed for all wire communication lines laid in forward areas in Korea. (Command Report - 981st FA Bn - June 53)

/OCAFF Comment: Failure to provide duplicate circuits as recommended in subparagraph 82a, FM 6-101, "The Field Artillery Battalion," was a contributory cause of the loss of communication./

(RESTRICTED) ITEM NO 110

COMMUNICATION DIFFICULTIES IN USE OF RC 292 ANTENNA. - Improvement in radio communication was due in part to procurement of RC 292 antenna. The additional range offered by this type antenna enabled this headquarters to communicate with three elements of the command located more than 15 air-line miles away. However, experience of the headquarters indicates that issuance of high power antenna of this type should not be made indiscriminately and that the antenna should not be made a normal part of the T/O&E. Units should only be issued this type antenna when either the rugged nature of the terrain or the excessive communication distance involved makes its use mandatory.

Many units are needlessly obtaining a range of 35 miles ground communication distance and upward to 75 miles of air-ground communication by use of this antenna. The result is that their signal strength often overlaps far beyond the range necessary to operate and denies the use of that channel to all other units within range. In one instance, a unit was forced to abandon a channel because of interference from a station in another corps which was located 30 miles away. This was in spite of the fact that no element of that head quarters was located within 15 miles of the unit whose signal was being blocked.

Radio communication could also be improved if the headquarters responsible for allocation of frequencies would reserve all channels falling in the overlap band for stations having need for the overlap. The channels involved should be assigned by individual frequency only to stations having actual or potential requirements for tank-infantry, tank-artillery, or infantry-artillery communication, and only after the geographical distance between stations required to use the same frequency had been considered.

The present practice of assigning overlap frequencies in blocks to divisions and corps for reassignment has resulted in a great number of stations operating on frequencies in the overlap bands which have no tactical use for overlap frequencies. As a consequence the overlap frequency band is jammed far out of proportion to the remainder of the band and the use of these frequencies is being denied to weaker stations who cannot move to the less crowded portion of the band. (Command Report - X Corps Arty - May 53)

/OCAFF Comment: Elevated antenna equipment is authorized to those units whose tactical deployment periodically may be expected to

require the additional range obtainable by this means. It is not intended that this equipment should be used at all times but only when the distances involved require it. Indiscriminate use of elevated antenna equipment will result in poorer rather than better communication as indicated. Assignment of frequencies must be planned; this is especially necessary to obtain the maximum usefulness from the limited number of overlap frequencies in the AN/GRC 3-8 series of radios.7

(RESTRICTED) ITEM NO 111

PRECAUTIONS ON USE OF SPIRAL FOUR CABLE. - No major changes in the standard spiral-four construction practices already in use were required for the new type spiral-four. However, a few minor precautions were necessary which were not required with the old type. They are:

a. The standard basket hitch made with WD-1/TT was found to slip on the new cable. To prevent this an extra clove hitch was made at the beginning of each basket hitch. It was found that field wire W-110B could be used applying the standard hitch without slipping. This wire was used for the line.

b. The new cable has a tendency to stretch when first installed, but after the initial stretch has occurred the cable will not contract or stretch further. The cable will normally have to be resagged after the stretching has occurred.

c. Extra precaution must be taken to prevent any vehicle from running over the cable while it is laying on the ground as it is more easily damaged from crushing than was the old type. (Command Report - 51st Sig Bn - June 53)

(RESTRICTED) ITEM NO 112

REVISION OF TM 11-2263, "LEAD COVERED CABLES," AND TM 11-2262, "OPEN WIRE POLE LINE CONSTRUCTION AND MAINTENANCE." - TM 11-2263, "Lead Covered Cables," is considered to lack sufficient details on the lashing of cable. TM 11-2262, "Open Wire Pole Construction and Maintenance," appears to be deficient in details on the operation and maintenance of vehicles used by the Signal Corps in construction activities. Attention is invited to the data on lashing of cables in Bell System Practices, Outside Plant Construction and Maintenance. Suggest that detailed information now lacking in TM 11-2262 on Signal Corps construction vehicles V-17 and V-18 be extracted from the following publications:

a. "Operation and Maintenance Instruction Manual on the Winch, Pole, Derrick, and Associated Equipment for Maintenance and Telephone Model," J. H. Holman Corporation, 41 West 150th Street, Cleveland 11, Ohio.

b. TM 9-819 on 2-1/2-ton, 6x6, Cargo Truck M-44.

c. "War Department Manual and Parts Catalog on the Auger, Earth, Skid-mounted, Gasoline Engine, Driven, Highway Model HDM-S with Continental Engine Model PF-226," Highway Trailer Company, Edgerton, Wisconsin.

d. "Operation and Maintenance Instruction Manual and Parts Catalog on the Highway Model HD Earth-boring Machine," Highway Trailer Company, Edgerton, Wisconsin.

Recommend that:

a. TM 11-2263, "Lead Covered Cable," be revised to include more detailed information on the lashing of cable.

b. TM 11-2262, "Open Wire Pole Line Construction and Maintenance," be revised to include additional information and data on the operation and maintenance of Signal Corps construction vehicles. (Command Report - Eighth Army - Jan 53)

(RESTRICTED) ITEM NO 113

ENGINEER SUPPLY AND MAINTENANCE TROOPS CONTROL IN FIELD ARMY. - Formerly, the control of maintenance companies and engineer supply points by construction groups resulted in an unfair share of the maintenance and supply effort being utilized by the construction units. With this effort now under centralized Army control all effort is coordinated and directed to critical points on an Army-wide level by such means as lateral transfer of scarce materials, parts, and in some cases personnel and tools.

To improve spare parts supply, recommend that unit assembly replacement be put into effect for engineer field maintenance companies. This would reduce time for repair and prevent the forward maintenance companies from stocking hundreds of unnecessary line items which would hamper their storage space and mobility. (Command Report - 78th Engr Fld Maint Co - May 53)

(RESTRICTED) ITEM NO 114

T/O&E FOR ENGINEER GROUP (MAINTENANCE AND SUPPLY). - Recommend that provisions for a movement controls section be considered in the preparation of future T/O&E's for an Engineer Group (Maintenance and Supply). (Command Report - 45th Engr Gp (Maint & Sup) - May 53)

(RESTRICTED) ITEM NO 115

RESTUDY OF T/O&E FOR ENGINEER CONSTRUCTION BATTALION. - Recommend that the T/O&E for Engineer Construction Battalions be restudied with a view toward reducing the number of crane attachments issued. It is unnecessary to furnish each crawler or truck-mounted crane with a complete set of attachments such as shovel front, pile driver leads, back hoe, dragline, and clamshell bucket. The crane is usually beyond repair before many of the attachments are used. They fit only the particular model for which they were issued. Only sufficient attachments should be furnished to enable operators to receive specialized training in their use; additional attachments should be available in theater stocks to provide augmentation when needed. The same principle should be applied to heavy construction equipment such as pumpcrete machines, road pavers and large asphalt plants. In order to provide the necessary operating specialists for this equipment, the T/O&E of a headquarters and headquarters company of a construction group should have equipment and personnel columns added to their present T/O&E, the added columns to be utilized as various missions are assigned to the group. The equipment and personnel would be held as long as required for the accomplishment of the current mission, thereafter being returned to an Army pool. Some items to be included in this augmentation column are:

Crusher, Jaw-type GED, crawler-mounted 200-4000 ton per hour	2 ea
Mixer, asphalt, DED, trailer-mounted 110-200 ton per hour	2 ea
Distributor, asphalt, 800 gal truck-mounted	6 ea
Dryer, aggregate, dual drum, GED, 80-150 ton per hour	2 ea
Finisher, asphalt, crawler-mounted, GED, 8' - 12'	2 ea
Tank, asphalt, trailer-mounted, w/steam coils 1500 gal	2 ea
Heater, asphalt, trailer-mounted, 3 car cap 42HP	2 ea
Roller, road, GED, 3 axle, 9-14 ton	2 ea
Paver, concrete, crawler-mounted dual drum, 34 cu ft	1 ea
Conveyor, belt, GED, 24" x 57"	4 ea
Graduation control unit, aggregate, GED trailer-mounted 4' x 8' vibrating screen, 3 compartment	2 ea
Floodlight equipment set No 2	4 ea

Crane-shovel, power unit, revolving crawler-mounted 2 cu yd cap w/shovel front, hook and block, clam shell and drag bucket 2 ea

(Command Report - 24th Engr Const Gp - May 53)

(RESTRICTED) ITEM NO 116

DRESSING OF WOUNDS. - As a general practice, thick and heavy dressings, secured with a generous amount of adhesive tape, are used on all types of wounds. This procedure is not only wasting material, it has also obscured the early detection of abnormality of the wound underneath the dressing, such as wound bleeding, dehiscence, infection, or maceration of the skin. A light, well placed dressing has proved more practicable. (Command Report - 7th Med Bn - June 53)

(RESTRICTED) ITEM NO 117

IMPROVISING EXHAUST DUCTS IN LAUNDRY TUMBLERS. - In the laundry section, four artillery powder containers were used to replace burned out exhaust ducts in the tumblers. The ends of the shell casings were cut out and four casings were welded together making a straight pipe. These proved more efficient than the regular exhaust duct. They do not burn out and being straight there are no obstructions to catch lint. (Command Report - 7th Inf Div - June 53)

/OCAFF Comment: The use of shell casings to replace burned out ducts in laundry tumblers is a workable, temporary field expedient. Replacement parts for burned out ducts are available through supply channels. Shell casings have salvage value./

(RESTRICTED) ITEM NO 118

MUDDY WATER PROBLEMS FOR BATH AND LAUNDRY UNITS. - The greatest operational problem - muddy water - was again encountered and bath units were shut down intermittently in order to prolong the life of the equipment. Holes were dug to a depth below the stream level in each of the sections, on a higher level of ground. These holes are near enough to the source of water supply so that by process of filtration muddy water seeping through the sand and rocks provides clean water for baths. Korean soil is sandy and has a tendency to cave in. Rocks were piled upon rocks to build a wall, but the sides still caved in. Sheets of tin held back the sides, but sand caved in behind and got in underneath, and the water in the holes was as muddy as the water in the stream. Cement is difficult to obtain and might prove the only solution to hold back the sand. (Command Report - 295th QM Bath Co - June 53)

/OCAFF Comment: Muddy water is a problem for both bath and laundry units. There is no known safe short cut to filtering water for mud removal by suction strainers. A pit dug adjacent to the stream is a good field expedient. Where conditions of soil will not permit such improvisation and water is unsafe for use, regular treatment (chemical treatment, sedimentation, filtration and sterilization) may be necessary./

(RESTRICTED) ITEM NO 119

IMPROVISED REFRIGERATOR TRUCK. - Seven cargo trucks, regularly engaged in hauling fresh fruits and vegetables to forward units, were converted from cargo vehicles into refrigerator trucks through the expedient use of salvage materials. Losses of perishable items due to extended periods of exposure to extreme cold weather were reduced to a minimum in the areas served by these trucks. In order to obtain the desired insulation effect, salvage canvas was stretched over extra bows, creating an air space over the body; cardboard and other cold resistant salvage materials were used on the sides; sawdust obtained from a local sawmill covered the floor and controlled heat from the truck heater was piped into the cargo compartment. Maintenance of controlled temperatures insures a considerable saving of perishable items destined for front-line consumption. (Command Report - Eighth Army - Jan 53)

/OCAFF Comment: Quartermaster refrigeration vans are provided for the purpose of hauling perishables. Where the tactical situation and/ or the road conditions preclude their use, consideration should be given to relocating the supply points and speeding up issue operations./

(RESTRICTED) ITEM NO 120

SUPPLY ECONOMY - EGG BREAKAGE. - A record of eggs received in the regiment through the month of May shows a total breakage of 10.5%. The eggs received are purchased by grade and price per dozen, price depending upon the size of the egg and thickness of the shell. The eggs received have been very thin shelled and priced at 53 cents per dozen. The eggs are shipped in the wooden type (30 dozen) crates.

The regiment drew 28,184 dozen eggs for the month of May with a breakage of 2837.6 dozen or a loss of $1297.92 for the month.

Recommend that a thicker shelled egg be purchased. Experience shows that an egg of this type will stand transportation much better and with a smaller percentage of breakage. Recommend that a new type container be developed for transportation of eggs to oversea theaters.

The commercial cardboard containers holding one dozen eggs placed inside a wooden or strong cardboard container would reduce the loss of eggs in shipment. (Command Report - 32d Inf Regt - May 53)

(RESTRICTED) ITEM NO 121

ARMORED VEST FOR FA GUN CREWS. - Many recent casualties sustained from enemy counterbattery fire could have been eliminated or reduced in severity had armored vests been available for issue to gun crews. During the past 60 days, counterbattery fire has increased materially, with a resultant increase in casualties.

Recommend that field artillery units be authorized sufficient number of armored vests for protection of personnel exposed to counterbattery fire. (Command Report - 5th FA Gp - May 53)

(RESTRICTED) ITEM NO 122

REPLACEMENT FACTORS AUTHORIZED BY SB 10-496. - The frequent rotation of personnel plus an unusually high pilferage rate has led to an abnormal supply situation in Korea. Existing replacement factors, as authorized by SB 10-496, have not proved sufficient to meet supply requirements. A comparison between actual issue experience and authorized replacement factors indicates that many of the replacement factors authorized by SB 10-496 are too low to maintain necessary supply.

Recommend that the Office of The Quartermaster General conduct an analysis of replacement factors authorized by SB 10-496 to determine whether or not the existing replacement factors fit the requirements in the Korean campaign. (Command Report - 55th QM Base Depot - May 53)

(RESTRICTED) ITEM NO 123

NAPALM MIXING EQUIPMENT. - The M4 Unit, incorporating the batch technique cannot compete in productivity with the M3 Unit; however, it produces a more uniform mix, and flame throwers and munitions may be filled directly from the Unit. It is more suitable for use by ground force personnel but lacks certain qualities which should be incorporated in all napalm mixing equipment. These are:

a. A continuous flow principle.

b. High degree of mobility.

c. Provisions for extreme cold.

The Mixing Unit, Incendiary Oil, M3 (E3R2) has a theoretical output of approximately 15 times that of the M4, but the thinkened fuel produced is by no means homogeneous, a factor important to proper flame thrower operations. In addition to this drawback, the rapid rate of discharge from the M3 Unit necessitates an extra step in the operation procedure. The thickened fuel is first discharged into a 55-gallon transfer drum which is then pressurized and transferred to 5-gallon cans. The objection to this transferring is the additional chance for contamination.

Numerous experiments have been performed on the M3 Unit in order to make it more suitable for use by ground force personnel. A mixer built on the principle of the M3 Unit, with modifications to include a slower discharge rate and an automatic hopper to produce a uniform gel would be highly superior to either type mixer now in operation.

A mixer of this type which could possibly be mounted in the rear of a 1/4-ton truck with a trailer mounted compressor would satisfy completely the needs of a field mixing team. (Command Report - 21st Cml Decontamination Co - May 53)

/OCAFF Comment: The Chemical Corps has a development project for improving flame fuel thickeners and equipment for mixing them. For further information on the M3 (E3R2) Mixing Unit, see Source No 690, inclosure to letter, ATTNG-26 350.05/4(DOCI)(7 Apr 53),OCAFF, 7 April 1953, subject: "Dissemination of Combat Information."/

(RESTRICTED) ITEM NO 124

NEED FOR ELECTRONIC METEROLOGICAL EQUIPMENT IN DIVISION ARTILLERY. - Visual meteorological equipment authorized this command does not meet the requirement for ballistic data. During periods of poor visibility when meteorological data are urgently needed the equipment cannot be used. Extended corps frontages preclude accurate results from the electronic message prepared in the observation battalion. While divisional artillery would not in all situations require electronic equipment, it and the personnel required to operate it should be included in T/O&E as a discretionary item. (Command Report - 7th Div Arty - May 53)

(RESTRICTED) ITEM NO 125

105-MM HOWITZER AMMUNITION WITH STEEL SPIRAL WRAPPED CARTRIDGE CASE. - Test firing of approximately 14,500 rounds of 105-mm howitzer ammunition with steel spiral wrapped cartridge cases was started by several US artillery battalions. Approximately one-fourth of the stock has been fired. The following information was extracted from fifteen reports of battalions firing this ammunition:

a. Every report submitted indicates that it is easier to place the projectile into the spiral wrapped case than into the conventional brass case, and easier to load the spiral wrapped case into the chamber.

b. All reports indicate that it is more difficult to extract the spiral wrapped case from the chamber after firing. Lacquer on the cases is melting and causing them to stick in the chamber, particularly when it is hot from sustained firing. Continuous fire is impaired after four or more rounds have been fired. Some cases are stuck so fast that it is necessary to ram them free.

c. Generally there were no differences noted in the amount of obturation obtained with the spiral wrapped cases as compared with the normal brass cartridge cases. One report did indicate that less obturation was obtained with the spiral wrapped case when fired from a cold chamber.

d. The spiral wrapped cartridge cases have been fired with charge 4 through charge 7.

e. One round was found to be unserviceable because the spiral case had unwrapped. (Command Report - Eighth Army - April 53)

(RESTRICTED) ITEM NO 126

FIRING OF SPIRAL WRAPPED STEEL CARTRIDGE CASE FOR 105-MM HOWITZER. - Analysis of the test firing of 13,535 rounds of 105-mm howitzer shell, HE, with spiral wrapped steel cartridge case, indicates the following characteristics of the tested ammunition:

a. On sustained fire or when more than four rounds per howitzer were expended, the lacquer on the case melts and the gummy residue causes the cartridge case to jam, slowing down firing. Some cases were stuck so fast that it was necessary to ram them free.

b. There was some loss of obturation effectiveness with this type cartridge with resulting back blast.

c. Some unraveling of the spiral case occurred resulting in the blackening of the sights by escaping gasses and unburned powder particles.

d. A slight increase of range effect was noted but the accuracy of the projectile was comparable to the conventional type ammunition. (Command Report - 45th Div Arty - May 53)

(RESTRICTED) ITEM NO 127

COLORED SMOKE SHELLS FOR 155-MM GUN. - A test was conducted in firing 155-mm howitzer colored smoke shells in a 155-mm gun, using normal charge only. Preliminary reports indicate that satisfactory results were obtained. The use of colored smoke shells in the 155-mm gun would increase the capabilities of that weapon, for which no such shells are being manufactured at present. The increased capability is desired to permit marking of targets for air strikes beyond the range of other artillery. (Eighth Army Artillery Info Bulletin No 6 - June 53)

/OCAFF Comment: Colored smoke shell for the 155-mm gun is presently under development and will be available for issue to troops in approximately eight months./

(RESTRICTED) ITEM NO 128

DAMAGED ROTATING BANDS AND PROJECTILE CAVITY DEFICIENCIES. -A serious problem of damaged rotating bands is developing. At least 50% of the projectiles reaching the batteries arrive without grommets protecting the rotating bands. The importance of smooth, unblemished rotating bands on the projectiles of the 8-inch howitzer cannot be over emphasized. The ballistic error introduced by the damaged rotating bands is great. In addition to those projectiles which arrive at the batteries without grommets, numerous projectiles are received by the batteries with grommets that have undoubtedly been installed after shipment. In these cases the projectile rotating band had already been damaged and the grommet serves no other purpose than to prevent further damage. There have been occasional instances of projectiles rendered unfit to fire due to severely scored rotating bands. (Command Report - 17th FA Bn - May 53)

(RESTRICTED) ITEM NO 129

INCREASED TRAVERSE FOR 155-MM HOWITZER. - In the February 1952 issue of the Combat Forces Journal appeared an article entitled "Increased Traverse for the 155-mm Howitzer." This article

dealt with the employment of a hydraulic jack to facilitate the shifting of trails of the 155-mm howitzer (towed). This battalion has adopted the jack idea with certain minor modifications. Because the spades of the howitzer are embedded by sustained firing, it was discovered that the 8-ton jack was not sufficient to raise the piece and break the trail spades loose. A 10-ton jack is presently being used which has proved to be adequate in lifting power and ease of operation. The head of the jack used is a circular disk with four lugs. A circular metal plate, slightly smaller in diameter than the jack head, has been welded under the howitzer four inches behind the center of gravity. The circular disk of the jack engages the circular plate on the underside of the howitzer and prevents slippage of the jack while the piece is being shifted. The use of the hydraulic jack has very definitely increased the speed of shifting trails and greatly eased the job of the howitzer section. As it was stated in the Combat Forces Journal, lateral displacement of the sight has been reduced by using the hydraulic jack. (Command Report - 31st FA Bn - May 53)

(RESTRICTED) ITEM NO 130

SUPPORTS FOR TRAIL SPADE FOR HOWITZERS. - Spring thaws and rains have caused a tremendous problem of drainage and ground support for trail logs in howitzer positions. Continuous firing has driven the trail logs deep into the soft earth. This problem has been greatly relieved by the use of a corduroy system around the trail pits. This system involves logs approximately 4 inches in diameter and 4 to 5 feet in length laid perpendicular to and under the trail log which supports the trail spade. This prevents the spade from digging down into the soft earth. Heavy posts and a timber facing behind the trail logs prevent the trail spades from pushing the trail logs to the rear. (Command Report - 31st FA Bn - March 53)

(RESTRICTED) ITEM NO 131

WEEKLY BORE SCOPE OF 155-MM TUBES. - The development of progressive stress in three 155-mm tubes of a field artillery battalion necessitated the replacement of these tubes. Recommendation was made and subsequently concurred with by the Division Ordnance Officer to bore scope these tubes weekly instead of monthly. (Command Report - 45th Div Arty - June 53)

/OCAFF Comment: Ordnance Committee Meeting 34663, 26 March 1953, reclassifies the howitzer, 155-mm M1 to limited standard and classifies the M1A1 as standard. The M1A1 howitzer has new metallurgical properties designed to meet the basic functioning temperature requirements./

(RESTRICTED) ITEM NO 132

USE OF SEARCHLIGHTS. - A suggested use is for searching the battlefield, with observers and crews of support weapons following the beam, ready to fire immediately on any targets revealed. Since the bulk of enemy construction is done at night the presence of a searchlight beam on a position and the threat that it might be accompanied by artillery or heavy weapons fire should have a distinct harassing effect. It might also be feasible in certain situations to have the lights mounted on self-propelled armored vehicles in order to move them to positions from which they can illuminate desired areas. There are numerous other possibilities for use of this new field artillery weapon. (Command Report - 75th FA Bn - May 53)

(RESTRICTED) ITEM NO 133

PRECISION ARTILLERY FIRE BY SEARCHLIGHT. - The following lessons were learned:

a. It is feasible to fire precision missions on point targets during the hours of darkness using a searchlight for illumination.

b. Such missions are more effective and require less ammunition expenditure than area type counter-battery fire against active artillery when the target can be illuminated.

c. The absence of standardized commands for adjusting the searchlights caused considerable confusion and delay. The method devised was to transmit an initial compass and vertical angle to the target and give subsequent corrections of RIGHT (LEFT), UP (DOWN) so many mils. The observer commands the same number of mils that he measures at the OP, establishes a bracket and splits the bracket until the searchlight is on the target. Since some of the searchlights have azimuth scales in degrees it is necessary for the observer to convert his corrections to degrees and employ the same procedure.

d. Since the searchlights are of necessity in exposed positions and receive considerable artillery fire, wire communications are not dependable. Now that each position is equipped with an AN/PRC-9 radio, any observer can contact the light directly by radio once permission has been granted to use it. (Command Report - 75th FA Bn - May 53)

(RESTRICTED) ITEM NO 134

IMPROVEMENT OF REAR STEP ON TRUCK, V-18/MTQ (SIGNAL CORPS EARTH AUGER). - Truck V-18/MTQ is provided with a step which enables the operator of the auger to mount the rear platform easily. This step is located at the extreme rear end of the vehicle and projects approximately two feet below the bed of the truck.

This truck is frequently used in rough terrain and is called upon to cross ditches and other similar obstacles. As the truck crosses these ditches the steps are caught on the ground and twisted out of shape as well as tending to tear the metal of the truck bed where the step is welded to the truck.

Motor pool mechanics removed the step from the vehicle, cut the step length to approximately 16 inches, put a half twist in the ends of the step so that it would be flat to the end of the truck bed and welded the step again on the vehicle.

No further trouble has been encountered with the steps of this vehicle as shortening the step has proved worthwhile. (Command Report - 51st Sig Bn - June 53)

(RESTRICTED) ITEM NO 135

IMPROVISED SPARE TIRE RACK FOR 1/4-TON TRUCK. - The spare tire rack has been continuously breaking, due to the weight of the tire and the rough roads of Korea.

Since the racks failed to hold the tire after rewelding several times, a tire support (see next page) was devised. This small device, easily attached to the bumperette, takes the place of a tire rack well, and is economical and effective. (Command Report - 728th MP Bn - May 53)

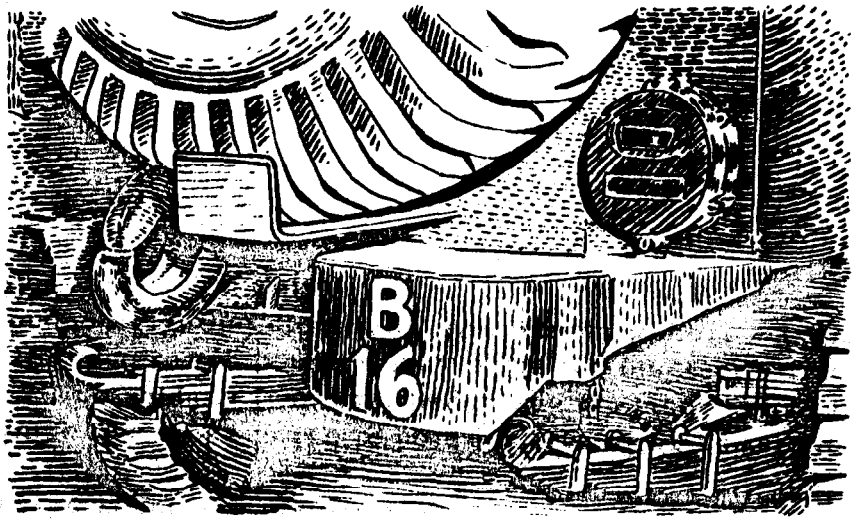

/OCAFF Comment: A modification work order concerning strengthening of the spare tire bracket will be published in the near future./

AWC
Copies Recd 2
Comdt
D/Comdt
Prog O
Secy
Crse I
Crse II
Crse III
Con Mt Gp
Jt St Gp
Library
Repro Sv
File

11-23-53